#20

1301394

3317

13-O-1394

(Do Not Write Above This Line)

AN ORDINANCE BY COUNCILMEMBER ALEX WAN

AN ORDINANCE AUTHORIZING THE MAYOR OR HIS DESIGNEE, ON BEHALF OF THE CITY OF ATLANTA, TO ENTER INTO AN ENCROACHMENT AGREEMENT FOR NON-CONFORMING USES WITH KKS, INC., D/B/A "THE WARREN", A LESSEE OF REAL PROPERTY LOCATED AT 818 NORTH HIGHLAND AVENUE, FOR THE PURPOSE OF INSTALLING A BLADE SIGN AT THE THIRD FLOOR LEVEL OF THE BUILDING WHICH WILL EXTEND OVER THE PUBLIC RIGHT-OF-WAY; TO WAIVE THE REQUIREMENT THAT THE ADJACENT LANDOWNER ENTER INTO THE AGREEMENT; AND FOR OTHER PURPOSES.

ADOPTED BY

DEC 0 2 2013

COUNCIL

- ☐ CONSENT REFER
- ☐ REGULAR REPORT REFER
- ☐ ADVERTISE & REFER
- ☐ 1st ADOPT 2nd READ & REFER
- ☑ PERSONAL PAPER REFER

Date Referred 11/18/13

Referred To: City Utilities

Date Referred

Refferred To:

Date Referred

Referred To:

489536-1

First Reading

Committee

Date

Chair

Referred To

Committee	Committee
City Utilities	
Date: Nov. 26 2013	Date
Chair	Chair
Action: Fav, Adv, Hold (see rev. side)	Action: Fav, Adv, Hold (see rev. side)
Other: On condition	Other
Members	Members
Refer To	Refer To

Committee	Committee
Date	Date
Chair	Chair
Action: Fav, Adv, Hold (see rev. side)	Action: Fav, Adv, Hold (see rev. side)
Other	Other
Members	Members
Refer To	Refer To

FINAL COUNCIL ACTION

☐ 2nd ☐ 1st & 2nd ☐ 3rd

Readings

☐ Consent ☐ V Vote ☑ RC Vote

CERTIFIED

DEC 0 2 2013

ATLANTA CITY COUNCIL PRESIDENT

CERTIFIED

DEC 0 2 2013

Rhonda Dauphin Johnson

MUNICIPAL CLERK

MAYOR'S ACTION

APPROVED

DEC 1 2013

WITHOUT CONSENT BY OPERATION OF LAW

CITY COUNCIL
ATLANTA, GEORGIA

AN ORDINANCE BY **13-O-1394**

COUNCILMEMBER ALEX WAN

AS SUBSTITUTED BY FULL COUNCIL

AN ORDINANCE AUTHORIZING THE MAYOR OR HIS DESIGNEE, ON BEHALF OF THE CITY OF ATLANTA, TO ENTER INTO AN ENCROACHMENT AGREEMENT FOR NON-CONFORMING USES WITH KKS, INC., D/B/A "THE WARREN", A LESSEE OF REAL PROPERTY LOCATED AT 818 NORTH HIGHLAND AVENUE, FOR THE PURPOSE OF INSTALLING A BLADE SIGN ON THE BUILDING WHICH WILL EXTEND OVER THE PUBLIC RIGHT-OF-WAY; TO WAIVE THE REQUIREMENT THAT THE ADJACENT LANDOWNER ENTER INTO THE ENCROACHMENT AGREEMENT; AND FOR OTHER PURPOSES.

WHEREAS, KKS, Inc. d/b/a "The Warren" ("Applicant"), is a tenant at a building located at 818 North Highland Avenue ("Property"); and

WHEREAS, the Applicant has a lease agreement with the owner of said property, Concrete Ideas, LLC, and said lease agreement does permit the Applicant to attach a sign to the exterior wall of the building; and

WHEREAS, the City of Atlanta's ("City") Code of Ordinances, at Sections 138-22 and 138-24, require that an Encroachment Agreement be entered into between the City and the Applicant for authorization to allow the installation of the sign in the public right-of-way; and

WHEREAS, the Commissioner of the Department of Public Works has reviewed the plans for the right-of-way encroachment and has determined that the sign will not adversely impact the ability of the affected right-of-way to handle pedestrian traffic or otherwise to perform its intended public function; and

WHEREAS, the Applicant desires to maintain the sign that will be installed; and

WHEREAS, the Applicant has agreed to conform to the conditions set out in the City Code of Ordinances at Sections 138-22 and 138-24; and

WHEREAS, the provision in Section 138-24 (b) that provides that the adjoining property owner be a party to the encroachment agreement will be waived pursuant to the provisions in the lease agreement.

NOW, THEREFORE, BE IT ORDAINED BY THE CITY COUNCIL OF THE CITY OF ATLANTA, GEORGIA, as follows:

SECTION 1: That the Mayor or his designee is authorized, on behalf of the Department of Public Works, to enter into an Encroachment Agreement for Non-Conforming Uses, under the City's Code of Ordinances with the Applicant for the purpose of granting to the Applicant the

right to install a blade sign on the property located at 818 North Highland Avenue in Atlanta, Georgia as depicted in Exhibit "A" attached hereto.

SECTION 2: That the Applicant has submitted a lease to the Property with the owner and landlord, Concrete Ideas, LLC, and a copy of said lease is attached hereto as Exhibit "B".

SECTION 3: That the plans and specifications for said blade sign shall be submitted for the review and approval of the Commissioner of Public Works.

SECTION 4: That the applicant as the encroaching party shall protect the interest of the City and will require any contractors who perform the work contemplated herein to indemnify and hold the City harmless from all claims arising out of the installation, maintenance, or removal of the blade sign, and that said contractors will maintain a policy of public liability insurance, at no expense to the City and in an amount approved by the City.

SECTION 5: That the Applicant shall comply with the conditions set out at Sections 138-22 and 138-24 of the City's Code of Ordinances.

SECTION 6: That the City Attorney is directed to prepare an Encroachment Agreement, acceptable as to form, for execution by the Mayor and the Applicant.

SECTION 7: That the provisions of Section 138-24 (b) of the Atlanta City Code with respect to the requirement that the adjoining landowner be required to execute the Encroachment Agreement are hereby waived.

SECTION 8: That the Agreement shall not become binding upon the City, and the City shall incur neither obligation nor liability thereunder until the Agreement has been approved by the City Attorney as to form, executed by the Mayor, attested to by the Municipal Clerk, and delivered to Applicant.

A true copy.

Deputy Clerk

ADOPTED by the Atlanta City Council DEC 02, 2013
APPROVED as per City Charter Section 2-403 DEC 11, 2013

AMENDED AND RESTATED LEASE AGREEMENT

THIS AMENDED AND RESTATED LEASE AGREEMENT (this "Lease") made and entered into as of March 4, 2005 and effective as of March 1, 2005 ("Effective Date"), and shall amend that certain lease styled "Shopping Center Lease" dated April 21, 2003, as previously amended ("Original Lease") by and between the Landlord, Tenant, and Co-Tenant as hereinafter defined.

WITNESSETH:

For and in consideration of the rents, covenants and agreements hereinafter reserved and contained on the part of Tenant to be observed and performed, Landlord demises and leases to Tenant, and Tenant leases, rents and accepts from Landlord the Premises, as hereinafter defined.

ARTICLE I.
DEFINITIONS AND EXHIBITS

1.1 DEFINITIONS: In addition to other terms which are elsewhere defined in this Lease, each of the following terms when used in this Lease with an initial capital letter shall have the meanings set forth in this Paragraph 1.1, and only such meanings, unless such meanings are expressly limited or expanded elsewhere in this Lease (please note that certain definitions in the Original Lease have been omitted as inapplicable as of the date of this Amended and Restated Lease):

IDENTIFICATION DEFINITIONS:

1.1.1 "Co-Tenant": Intown Restaurant Corp. (IRC).

1.1.2 "Co-Tenant's Trade Names": Dark Horse Tavern and 10 High.

1.1.3 "Landlord": Concrete Ideas, LLC, a Georgia Limited Liability Company

1.1.4 "Landlord's Address": 750 Ponce De Leon Suite #2 Place Atlanta Georgia 30306, or such other address designated from time to time by Landlord in writing as constituting Landlord's Address hereunder. Such shall also serve as the Co-Tenant's address.

1.1.5 "Landlord Group": Landlord and Landlord's agents, servants, employees, officers, attorneys, trustees, brokers, shareholders and directors.

1.1.6 "Shopping Center": That certain property commonly known as 816-818 N. Highland Avenue, Atlanta, Fulton County, Georgia and containing a (3)-story building, including the basement.

1.1.7 "Tenant": KKS, Inc. dba "The Warren".

1.1.8 "Tenant's Mailing Address": 1190 Cumberland Road, Atlanta, GA 30306 or such other address designated from time to time by Tenant in writing as constituting Tenant's Address hereunder.

1.1.9 "Tenant's Trade Name": Referred to as the "The Warren" throughout this Lease.

1.1.10 "Tenant's Address in Shopping Center": 818 N. Highland Avenue, 3rd Floor, Atlanta, Georgia 30306.

CORE LEASE TERMS

1.1.11 "Premises": the third and top floor of the Shopping Center, which presently contains approximately 2,600 gross rentable square feet, and the improved top level of the outdoor deck attached to the third floor, which presently contains approximately 450 gross rentable square feet. Specifically not included in the Premises are the Common Areas but subject to certain maintenance or joint use provisions herein.

1.1.12 "Lease Term": July 1, 2002 to February 28, 2020, subject to three Renewal Options specified herein.

1.1.13 "Rent Commencement Date": December 1, 2003.

1.1.14 "Security Deposit": None.

1.1.15 "Use of Premises": The Premises shall be occupied and used [redacted]

1.1.16 "Common Areas": The parking area, driveways, sidewalks, front staircase up to but not including the entrance door, rear staircase up to the entrance door, landscaped areas, and other common areas of the Shopping Center as they are or may be from time to time constituted.

1.1.17 "Signs": All lettering, signs, awnings, advertising matter, or any other items of any kind on the roof, door, windows, store front, or the exterior of the Premises or Common Areas.

1.1.18 "Entrances": The two exterior or interior entrances to the Premises, as follows: Entrance #1 Mezzanine entrance from inside the Dark Horse Tavern into the Premises. Entrance #2 Doorway from the exterior staircase into the Premises.

1.1.19 "Aggregate Rent": All Base Rent (1.1.20), together with Triple Net Additional Rent (1.1.21), Allocated Utilities (1.1.22), Guaranty Fee (1.1.23) or Additional Charges (1.1.24) payable under this Lease.

1.1.20 "Base Rent": shall replace the concept of Percentage Rent as of the Effective Date of this Amended and Restated Rent, and shall be as described as "Applicable Annual Rent" below (which also shows Renewal Periods, if elected by Tenant):

ANNUAL BASE RENT and MONTHLY INSTALLMENT OF BASE RENT:

Period		Annual Base Rent (without adjustment)	Annual Amortization Credit	Applicable Annual Rent (as adjusted for amortization credit)t	Monthly Installment of Rent
from	through				
3/1/2005	2/28/2010	[redacted]	[redacted]	[redacted]	[redacted]
3/1/2010*	2/28/2015	[redacted]	[redacted]	[redacted]	[redacted]
3/1/2015*	2/28/2020	[redacted]	[redacted]	[redacted]	[redacted]
3/1/2020**	2/28/2021	[redacted]	[redacted]	[redacted]	[redacted]
Years thereafter**	Up to 2/28/2034	[redacted]	N/A		

[redacted]

** Renewal Years applicable only if elected by Tenant. Shows [redacted] increase from previous year.

1.1.21 "Triple Net Additional Rent": Triple Net Additional Rent shall have commenced on December 1, 2003 and shall be constituted of the following seven items (with appropriate prorations and allocations) as of the Effective Date, subject to the definitions in subparagraph 1.1.21.8:

1.1.21.1 Common Area Maintenance: [redacted] of actual costs of CAM (as defined herein) .

1.1.21.2 Property Taxes: [redacted] of actual costs.

1.1.21.3 Building Insurance: [redacted] of actual costs.

1.1.21.4 Reimbursement for payments to Capital Equipment Leasing when due and payable under the NCI/Virginia-Highlands Associates, Inc. dba Neighbors Equipment Lease obtained for benefit of Tenant.

1.1.21.5 $750 per month NCI consulting/accounting services fee referenced in the Special Stipulation up through the month of December 2005 unless the service is terminated by Tenant.

1.1.21.6 Reimbursement of any payments made by [redacted] his capacity [redacted] benefit of the operations of Tenant.

1.1.21.7 Definitions Applicable to Triple Net Additional Rent:

"Common Area Maintenance" or "CAM": All costs and expenses incurred by Landlord or its affiliated entities arising out of or related to the operating, managing, policing, equipping, lighting, painting, cleaning, repairing, replacing, resurfacing, paving, repaving, administering, maintaining for the following areas of the Shopping Center: (a) the exterior portions of the Shopping Center and all portions and components thereof, including, without limitation, the roof of the Shopping Center including all roof repairs and roof replacement (it is expressly understood by all parties to this Agreement that a new roof was installed in April of 2002), (b) the Common Areas and (c) commencing as of the Effective Date, the dumpster costs for the Shopping Center. CAM is intended to encompass normal and regularly scheduled maintenance activities and shall include, without limitation, the monthly pest control for all of the Shopping Center, landscaping, lighting of back parking lot and sidewalk areas, traffic control, sanitary assessments and services, removal of snow, trash, and all costs for or associated with supplies, material and personnel to implement any of the foregoing, all as reasonably determined by Landlord. Costs shall the followings for the Premises shall not constitute CAM on the basis that Tenant has entered into dedicated arrangements with providers not involving Co-Tenant: alarm system, telephone service, and website hosting. In addition, costs for any of the following shall not constitute CAM or Shared Utilities, as the case may be, unless Tenant affirmatively elects in writing to be in joint use situation with the Co-Tenant: [redacted] Notwithstanding the foregoing, for purposes of this Lease, CAM for the entire Shopping Center shall be limited under this Lease to [redacted] year in [redacted] such cap shall be increased [redacted] each year) excluding new service for which Tenant has elected to participate with Co-Tenant. CAM may include capital improvements to the Property required from time to time (such as roof replacement or replacement of back stairwell) incurred in previous years to the extent Tenant's [redacted] share of costs had not been previously fully captured in year of improvement (and years thereafter) due to application of the cap, but in all cases CAM for any one year shall be subject to that year's cap. Also, Compliance Work (as defined below) for unscheduled items shall not be CAM but may constitute Additional Charges hereunder.

"Property Taxes": All real estate taxes, ad valorem taxes, assessments (including, without limitation, general and special assessments for public improvements or benefits whether or not commenced or completed during the Lease Term, as same may be extended or renewed, and sanitary and trash removal assessments), sewer assessments and all other taxes and assessments levied, assessed or imposed at any time by any municipal, county or state government or any other governmental authority or agency upon or against the Shopping Center or any portion thereof, and also any tax or assessment levied, assessed or imposed against the Shopping Center or any portion thereof at any time by any governmental authority in connection with any franchise or the receipt of any income, rent or profit from the Shopping Center to the extent that same shall be in lieu of all or a portion of any of the aforesaid taxes or assessments upon or against the Shopping Center, and any

sales or use tax imposed by any Laws by reason of or in any way related to the occupancy or use of the Premises or the payment of rental therefore by Tenant, together with any out-of-pocket expenses reasonably incurred to challenge any assessment of Property Taxes; provided, however, that Property Taxes shall not encompass any ad valorem personal property taxes, to the extent assessed, on personal property which shall be borne by the owner (or if leased, the lessee) of the item of personal property.

"Building Insurance": Liability, fire and extended coverage insurance premiums for the Shopping Center and Common Areas, subject to Article VIII below.

"Allocated Utility Charges" shall mean with respect to any Utilities (as defined in next sentence) provided to and used by Tenant as part of the Shopping Center, that as of the Effective Date, that in lieu of the previous provisions in the Lease which provide for additional percentage rent of [redacted] for utility charges, Tenant shall instead pay "Allocated Utility Charges." "Allocated Utility Charges" shall mean (i) with respect to Utilities for which usage by Tenant is recorded by separate submeters, the costs for actual usage (which in most instances reflect the Co-Tenant's usage discounts) and (ii) with respect to any Utilities provided to and used by Tenant as part of the Shopping Center for which there has not been installed separate submeters or other arrangement to pay for Tenant's sole usage, then 30% of the overall shared expense for any of such Utilities; provided, however, that if such Utilities are charged on basis of lines or packages (for instance, certain cable television or satellite TV services), then Allocated Utility Charges shall be based on actual number of lines or specific package used as reasonably determined from the vendor. "Utilities" shall mean all water, gas, electricity, heat, power, or any other utilities or services attributable to or servicing the Premises for which Tenant takes benefit. Tenant will pay for its own DMX receiver, and Tenant shall provide its own telephone service and security system. Allocated Utility Charges shall also mean, to the extent applicable, [redacted] of the costs incurred by Landlord or Co-Tenant for necessary repairs to lines for Utilities which serve the Premises and are located outside the perimeter walls of the Premises. Tenant has also agreed to pay during the 12 month-period after the Effective Date 1/12 portion of the costs of the installation of submeters per Section 5.1.

1.1.22 "Guaranty Fee" shall mean that amount computed based on [redacted] of the principal balance (as of the end of each month) of the line of credit to Main Street Bank which was obtained by Kristi Warren/Tenant for the benefit of the operations of Tenant and which is subject to the guaranty of Douglas Landau, payable either monthly by cash or quarterly in stock in Landlord in accordance with Paragraph 3.3. hereof. The monthly fee shall be computed by taking the principal balance due on the line of credit as of the end of the previous month and multiplying that figure by 0.00166.

1.1.23 "Additional Charges" shall mean the following non-recurring, currently unforeseen charges or costs: (A) [redacted] any Compliance Work, and (B) Additional Administrative Assessments or Costs.

1.1.23.1 "Compliance Work": All repairs, replacements, alterations or additions necessary to comply with all Laws with respect to the Premises, or reasonably necessary structural repairs to the exterior walls, decks and foundations of the Shopping Center, specifically excluding any recurring CAM items (repair, replacement, rebuilding, painting, cleaning, or maintenance), whether structural or non-structural: (1) to the exterior of the Shopping Center or improvement thereon or any portion thereof, except as expressly defined as a Tenant Repair herein, or (ii) to any damage caused by wood-destroying organisms, (to any exterior or interior portions of any windows, doors, glass, plate glass, storefronts, locks, hardware, Signs, or any casing, frames or caulking which support or surround same, or (iii) the portion of any casualty loss that is not covered by Building Insurance. Compliance Work shall not include any repairs, replacements, alterations or additions that relate solely to or are caused solely by the operations of Co-Tenant.

1.1.23.2 "Additional Administrative Assessments or Costs" shall mean: (i) any penalties under Section 3.2, if applicable, or (ii) any charge in accordance with paragraph 11.3 for late payment of Aggregate Rent.

LEGAL TERMS:

1.1.24 "Affiliates" shall mean, for individuals, such individual's family members or his or her spouse's family members or any entity majority-owned by such person or such family members; and for entities, other entities under common control with the majority owner(s) of such entity.

1.1.25 "Claims": All liabilities, demands, claims, costs, suits, actions, judgments, expenses and obligations, including, without limitation, costs of investigation and attorney's fees, disbursements and expenses at both the trial and appellate levels, related thereto.

1.1.26 "Condemnation": Any taking by eminent domain for any public or quasi-public usage or purpose, including, without limitation, any conveyance in lieu of or under threat of condemnation.

1.1.27 "Default Termination": The date of termination of this Lease arising out of or due to a Tenant Default.

1.1.28 "First Mortgage": Any Mortgage, which now or hereafter has a first priority over all Mortgages encumbering the Premises.

1.1.29 "Hazardous Substance": Any element, compound chemical mixture, contaminant, pollutant, material, waste or other substance which is defined, determined or identified as toxic or hazardous under any Laws, including, without limitation, the Comprehensive Environmental Response, Compensation and Liability Act of 1980, the Resource Conservation and Recovery Act of 1976, the Hazardous Materials Transportation Act, the Toxic Substances Control Act, the Clean Water Act, the Clean Air Act, the Safe Drinking Water Act, the National Environmental Policy Act of 1969, the Superfund Amendment and Reauthorization Act of 1986, and all Laws that are similar thereto. With respect to any

hazardous or regulated materials required in the operation of Tenants business, Tenant shall be allowed to bring upon, store and use any and all materials reasonably necessary for Tenant to pursue the uses provided for by the Lease. Landlord agrees that the disposal of non- toxic neutral effluents through the plumbing facilities shall not be deemed in violation of the Lease so long as such non-toxic neutral effluents do not adversely affect the plumbing facilities and the disposal of same is not prohibited by any local, county, state, federal or other governmental authority of bureau or department thereof.

1.1.30 "Invitees": Employees, agents, servants, assignees, subtenants, invitees, licensees, customers, visitors, concessionaires and contractors.

1.1.31 "Laws": All zoning ordinances, laws, statutes, ordinances, orders, regulations, directives, rules or requirements of all federal, state, city, county or other governmental, public or quasi-public authorities, bodies, boards, or agencies, or any departments or bureaus thereof, now existing or hereafter created, including, without limitation, all building, zoning, environmental, health and fire-safety laws, the Americans With Disabilities Act of 1990 the Occupational and Safety and Health Act of 1970, and all laws relating to Hazardous Substances, including all amendments thereto and all regulations promulgated thereunder.

1.1.32 "Mortgage": Any mortgage, deed of trust or security deed encumbering the Premises .

1.1.33 "Mortgagees": Any holder of a Mortgage. (The Mortgagee as of the date of the amendment and restatement of this Lease is Main Street Bank).

1.1.34 "Non-Related Party": Any entity or individual who is not a shareholder, member or investor of the Tenant, Co-Tenant or Landlord.

1.1.35 "Obligated Party": The party obligated to perform the Compliance Work in accordance with the terms of Paragraph 6.3.

1.1.36 "Restoration Cost": The total cost to restore damage or destruction to the Premises.

1.2 The Exhibits enumerated in this Paragraph 1.2 and attached to this Lease are incorporated in this Lease by this reference and are to be construed as part f this Lease:

1.2.1 Exhibit "A": Special Stipulations.

1.2.2 Exhibit "B": Tenant Improvement Guidelines.

1.2.3 Exhibit "C": Guest Policies

1.2.4 Exhibit "D": Stipulated Build-Out Costs and Amortization

1.2.5 Exhibit "E": Form of SNDA

Value shall initially be stipulated to be [redacted] per share as of the date of this Amended and Restated Lease and Landlord agrees and stipulates that such shall never be less than such [redacted] per share price for purposes of the Guaranty Fee under the Lease. For any election by Tenant to pay the [redacted], such shall be effective for a 3-month period, and Tenant shall indicate which current stockholder of Landlord is contributing (or otherwise advancing) her or its stock to Tenant for purposes of the Guaranty Fee.

2.3 USE OF RENT CREDIT. The parties acknowledge that the Amortization Credits specified in Section 1.1.10 are intended to offset from the Base Rent a mutually-agreed portion of certain costs incurred by Tenant in the build-out of the Premises. Tenant agrees for Landlord's benefit that it shall, commencing with the Year 4 lease year (which starts March 1, 2008) and ending with the Year 15 lease year (which starts March 1, 2019), make payments of principal each year with respect to any of Tenant's obligation(s) (whether represented by note or lease) to which Co-Tenant or Douglas Landau is lessee of record, co-obligor or guarantor equal to one-half of the Amortization Credit (rent credit) specified for such lease year.

ARTICLE III
USE OF PREMISES

3.1 PREMISES DEMISED. The Premises are located in the Shopping Center and have been accepted and improved by Tenant. The Premises are demised and leased subject to all Laws, and the state of title of the Shopping Center, and any statement of facts which an accurate survey may disclose, together with all easements, Mortgages, agreements, encumbrances, and all other liens, charges or other matters of any nature, recorded or unrecorded, affecting the Premises or the Shopping Center. Notwithstanding the definition or description of the Premises or the method of calculation of the gross rentable square footage of the Premises, the Premises demised hereunder do not include the right of any usage whatsoever of the exterior walls, roof, or the land or area above or beneath the Premises, and Tenant shall not attach or place anything on the roof or exterior walls of the Premises, except that (i) Tenant may attach a sign to the exterior walls of the building in compliance with Section 7.1 herein, (ii) Tenant may install window boxes or window guards to the exterior of the building, (iii) Tenant may install an awning to cover the outdoor seating area. Tenant or its agents may access the roof, but only for purposes of maintenance of its heating or air units. No rights, licenses, or easements are created under the Lease, except as expressly demised hereunder, and no easement for light or air is leased with or included in the Premises. In addition to the foregoing, Landlord shall make available to Tenant, on first come first serve basis, any paid parking rights in Landlord's parking lot at 841 N. Highland to the extent the lot continues to be owned by Landlord and such parking rights are available for subscription by the general public; provided, however, that any such rights may be canceled or held in abeyance at any time should Landlord construct improvements on such parking lot.

*

within a reasonable time. After a reasonable time and upon written notice to the Landlord and Mortgagee, if Landlord and/or Co-Tenant fail to undertake and/or diligently pursue any material Landlord and/or Co-Tenant Repairs then Tenant has the right to have the Landlord and/or Co-Tenant Repairs made, to bill the Landlord and or Co-Tenant and to require prompt payment of Tenant's reasonable actual out of pocket expenses from the Landlord. If Landlord fails to repay Tenant its reasonable out of pocket expenses within thirty (30) days after sending a bill for same, Tenant may deduct the amount owed from Tenant's next month's rent. Landlord and Tenant shall reimburse each other for any actual fines or fees that either of them may pay which are the result of a false alarm caused by the other (or any agent or invitee thereof).

6.3 COMPLIANCE WITH LAWS.

6.3.1 In furtherance of the foregoing, Landlord and/or Co-Tenant shall, at all times during the Lease Term, as same may be extended or renewed, perform all Compliance Work which is applicable to (a) the Premises in general, and is not in any way related to Tenant's particular or specific use or occupancy of the Premises, or (b) any Hazardous Substance which was placed in, on or upon the Premises prior to the Commencement Date by any party other than Tenant or the Invitees of Tenant.

6.3.2 Except with respect to those items of Compliance Work which are the responsibility of Landlord and/or Co -Tenant in accordance with the express terms of Subparagraph 6.3.2, Tenant shall not violate, nor take any action or fail to take any action which would result in Landlord or Co-Tenant or the Premises being in violation of, any Laws, whether or not the Laws relate to or be for a period prior to the Commencement Date, or relate to or involve any extraordinary or ordinary, or structural or non-structural, Compliance Work of or to any structure upon or adjacent to the Premises, irrespective of whether the Laws or Compliance Work be of a kind that might be deemed to be now within the contemplation of Landlord, Co-Tenant and Tenant, and Tenant shall, at all times during the Lease Term, as same may be extended or renewed, promptly comply with all provisions, recommendations and requirements of any fire, liability or other insurer affecting or covering the Premises and the Shopping Center, or any part thereof, and (ii) all Compliance Work arising out of or related to Tenant's particular or specific use or occupancy of the Premises. Tenant shall, and does hereby, indemnify and hold harmless Landlord and Co-Tenant from and against all Claims arising out of or related to the obligations of Tenant under this Subparagraph 6.3.2. Tenant shall promptly procure and thereafter maintain all licenses and permits, which are necessary or desirable to maintain and operate the business of Tenant in the Premises.

6.3.3 Notwithstanding anything contained in this Paragraph 6.3 to the contrary, in the event that the Compliance Cost exceeds the aggregate sum of Aggregate Rent for the Lease Year in which the need to perform the Compliance Work arises, the Obligated Party shall be entitled to elect to terminate this Lease rather than perform the Compliance Work, by giving written notice of termination to the other party, which notice must be given within twenty (20) days after the Obligated Party (i) becomes aware of the requirement for the Compliance Work, and (ii) ascertains the approximate or exact Compliance Cost. In the event that the Obligated Party terminates this Lease pursuant to this Subparagraph

6.3.3, the other party may, within ten (10) days after such notice of termination, agree to perform the Compliance Work at such other party's sole expense, in which event this Lease shall continue in effect unless the other party fails to perform the Compliance Work within any applicable time limitation imposed by Laws. Landlord represents that its construction of the Premises has been in accordance with applicable building codes and regulations and that no materials or substances have been utilized in the construction of the Premises, which are prohibited by law. Landlord further agrees that Tenant's obligation to comply with any and all requirements of any legally constituted public authority, including the United States of America, the State of Georgia, city and county codes and regulations or any agencies thereof, arises by virtue of Tenant's occupancy and use of the Premises only.

6.4 FIXTURES AND PROPERTY. Tenant grants Landlord and Co-Tenant a security interest in all furniture, fixtures and equipment purchased or leased by Tenant and placed in the Premises, for such time as Landlord or Co-Tenant acts as Guarantor for Tenant on a commercial lease or other commercial debt (the "Guaranty Period"). During the Guaranty Period Tenant shall not remove the referenced furniture, fixtures, and equipment from the Premises, except for repairs or as replaced with other same or similar furniture, fixtures and equipment. Tenant agrees to cooperate with Landlord in filing all relevant UCC agreements necessary to perfect or terminate the security agreement. Tenant may not remove trade fixtures or any other equipment to the extent such are encompassed within the Equipment Lease referenced in the definition of Additional Rent.

6.5 LIENS. Tenant shall promptly pay for all work performed by or on behalf of Tenant or any party holding the Premises through or under Tenant, and Tenant shall not permit any mechanic's, materialman's or any other type of lien or claim of lien to be filed against the Premises by reason of or related to any work supplied or claimed to have been supplied to Tenant or anyone holding the Premises through or under Tenant. In the event that any such mechanic's, materialman's or other lien or claim of lien shall at any lime be filed against or affecting Landlord, the Premises or the Shopping Center, whether said lien or claim of lien be valid or not, Tenant shall indemnify and hold Landlord harmless from same and shall, within ten (10) days after notice of the filing thereof, cause such lien to be canceled and discharged of record or bonded off. Nothing in this Lease shall be construed in any way as: (A) constituting the consent, authorization or request, express or implied, of Landlord to any contractor, subcontractor, laborer, mechanic, materialman or any other party for the performance of any work to or for the benefit of Landlord, or (B) giving Tenant the light, power or authority to act as agent of Landlord or on behalf of Landlord in causing, contracting for, or permitting any work.

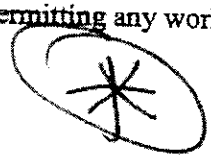

ARTICLE VII.
SIGNS

7.1 SIGNS. Tenant shall not place or maintain, any Signs on the exterior walls that do not comply with the governing signage code of the City of Atlanta and all other governmental bodies having jurisdiction thereof. Tenant may place exterior signage on the exterior walls of the building. Such signage may be placed on the first or third level of the exterior walls. All Signs shall be Tenant Repairs and shall comply with all Laws. In the event that Landlord elects to

remodel or renovate all or a substantial portion of the Shopping Center, Landlord shall be entitled to require Tenant to replace any or all of such Signs with such substitute Signs as are furnished by Landlord, at the sole expense of Landlord, provided that such Signs so furnished by Landlord are consistent with the overall remodeling or renovation plan of Landlord. Tenant must first obtain prior consent, which consent shall no be unreasonably withheld or delayed, any changes to the signage.

ARTICLE VIII.
INSURANCE, INDEMNITY, DAMAGE AND DESTRUCTION

8.1 INSURANCE. Tenant shall obtain and maintain in full force during the Lease Term, as same may be extended or renewed, with respect to the Premises, comprehensive general public liability insurance, with contractual liability endorsement, with coverage in amounts not less than [redacted] with respect to property damage and bodily injury, personal Injury or death to one (1) or more persons, which insurance shall insure the interest of Landlord and Tenant and any designees of Landlord, including without limitation, any Mortgagee. Such insurance maybe furnished by Tenant which maybe furnished by a blanket insurance policy. Landlord agrees to obtain and maintain adequate property and casualty insurance for the structure and exterior of the Shopping Center throughout the term of this lease and to provide a copy of such insurance policy or policies to Tenant upon request, and Tenant acknowledges that certain insurance on the building obtained by Landlord shall be part of Additional Rent pursuant terms of paragraph 2.1 as cross-referenced to the definition in subparagraph 1.1.21. Tenant may also seek its own separate insurance for its benefit on the leasehold improvements, furniture and fixtures at the Premises. Landlord and Co-Tenant agree that it shall make available its staff and requisite information, including access and information from the insurance agent/broker for Landlord, for Tenant to determine what insurance coverage held by Landlord/Co-Tenant, on the one hand, and Tenant, on the other hand, may be duplicative such that Tenant may seek more customized insurance coverage for uncovered risks.

8.2 INDEMNITY; LIABILITY OF LANDLORD.

8.2.1 Tenant shall, and does hereby, indemnify, release and save harmless the Landlord Group from and against all claims except for claims due to the negligent or intentional acts of Landlord arising out of or related to (i) any loss of life, or personal injury or property damage, (ii) this Lease, or (iii) any transaction or occurrence in, on, upon or near or involving the Premises, Common Areas, or Shopping Center or the occupancy or use thereof.

8.2.2 Tenant shall store, sell and use Tenant's property, fixtures, inventory, and equipment, and shall use and occupy the Premises and all other portions of the Common Areas and Shopping Center at Tenant's own risk, and Tenant shall and does hereby release the Landlord Group from and against any claims of any nature arising out of or related thereto.

8.2.3 Notwithstanding anything in this Lease to the contrary, neither Landlord nor the Landlord Group shall have any personal liability hereunder and Tenant shall look solely to

election, accept or reject Notwithstanding that the Commencement Date may occur and the Lease Term may commence after the date of execution of this Lease, upon delivery and acceptance of this Lease in accordance with the terms of this Lease, this Lease shall be fully effective, and in full force a effect and valid and binding against the parties in accordance with, but on and subject to, the terms and conditions of this Lease.

16.1.2 As a material inducement to Landlord to enter into this Lease, Tenant (and, individually each party executing this Lease on behalf of Tenant), intending that Landlord rely thereon, represents and warrants to Landlord that:

(i) Tenant and the party executing on behalf of Tenant are fully and properly authorized to execute and enter into this Lease on behalf of Tenant and to deliver this Lease to Landlord;

(ii) Tenant has executed and entered into this Lease free from fraud, undue influence, duress, coercion or other defenses to the execution of this Lease;

(iii) This Lease constitutes a valid and binding obligation of Tenant, enforceable against Tenant in accordance with the terms of this Lease;

(iv) Tenant is duly organized, validly existing and in good standing under the Laws of the state of Tenant's organization and has full power and authority to enter into this Lease, to perform Tenant's obligations under this Lease in accordance with the terms of this Lease, and to transact business in the state in which the Premises are located;

(v) The execution of this Lease by the Individual or individuals executing this Lease on behalf of Tenant, and the performance by Tenant of Tenants obligations under this Lease, have been duly authorized and approved by all necessary corporate or partnership action, as the case may be. and the execution, delivery and performance of this Lease by Tenant is not in conflict with Tenant's bylaws or articles of incorporation (if a corporation), agreement of partnership (if a partnership), and other charters, agreements, rules or regulations governing Tenants business as any of the foregoing may have been supplemented or amended In any manner.

16.1.3 This Lease shall be deemed to have been executed in Georgia, and the interpretation, construction and performance of this Lease shall be governed by the Laws of the State of Georgia.

16.1.4 This Lease may be executed in duplicate, each counterpart of which shall be deemed an original and any of which shall be deemed to be complete of itself and may be introduced into evidence or used for any purpose without the production of the other counterpart or counterparts.

[Signatures on following page.]

IN WITNESS WHEREOF, the parties hereto have duly executed this Lease in duplicate, individually or through their authorized officers, agents or attorneys-in-fact, as the case may be, causing their respective seals to be affixed hereto the day and year first above written.

TENANT: KKS, Inc., a Georgia corporation By: Kristi L. Warren President CO-TENANT: Intown Restaurant Corp., a Georgia corporation By: Douglas F. Landau Chairman	LANDLORD: Concrete Ideas, LLC, a Georgia limited liability company By: Douglas F. Landau Manager

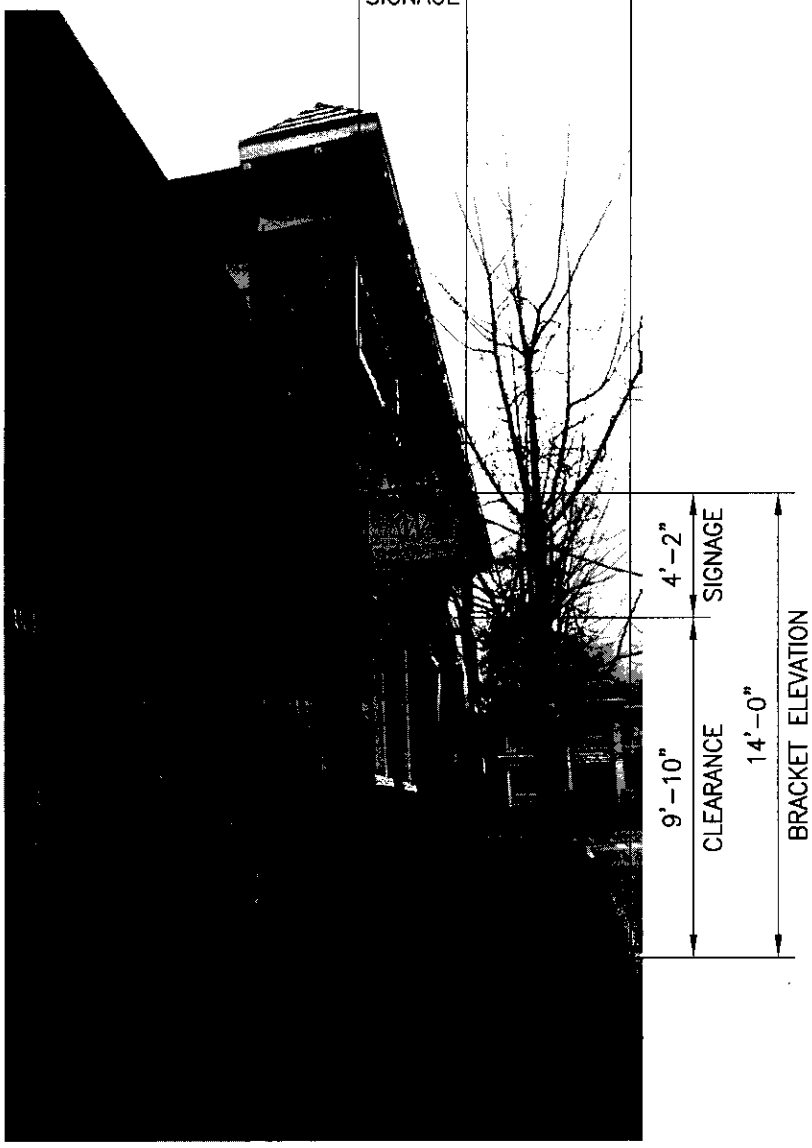

SIDEWALK ENCROACHMENT

SCALE: 3/16"=1'-0"

GEORGIA
REGISTERED
No. 29213
PROFESSIONAL
2-20-13
ENGINEER
PIERRE D. COIRON

SIGNAGE ENCROACHMENT
PLANS & ELEVATIONS

Se STABILITY ENGINEERING
431 Ponce de Leon Av, Ste 4, Decatur, GA 30030 Ph/Fax: 404-377-9316

818 N. HIGHLAND
THE WARREN

SCALE:	DATE:	DRWN BY:
NOTED	2/20/2013	CAM

STABILITY NUMBER: Se13027

	SHT	REV
S-1	1 OF 4	

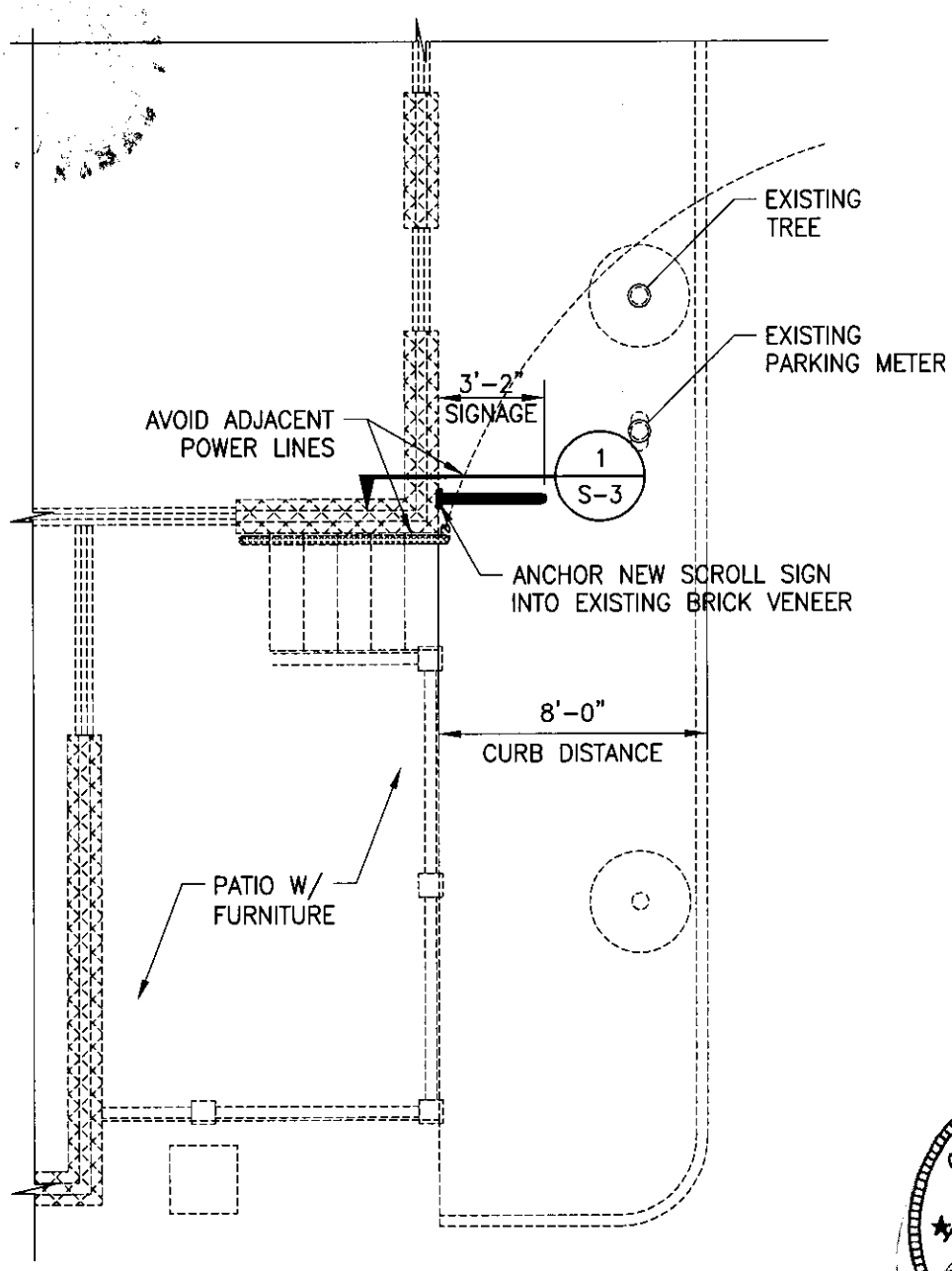

STREET PLAN

SCALE: 3/16"=1'-0"

GEORGIA REGISTERED No. 29213 PROFESSIONAL ENGINEER PIERRE D. COIRON 2-20-13

SIGNAGE ENCROACHMENT PLANS & ELEVATIONS

Se STABILITY ENGINEERING
431 Ponce de Leon Av, Ste 4, Decatur, GA 30030 Ph/Fax: 404-377-9316

818 N. HIGHLAND THE WARREN

SCALE:	DATE:	DRWN BY:
NOTED	2/20/2013	CAM

STABILITY NUMBER: Se13027

	SHT	REV
S-2	2 OF 4	

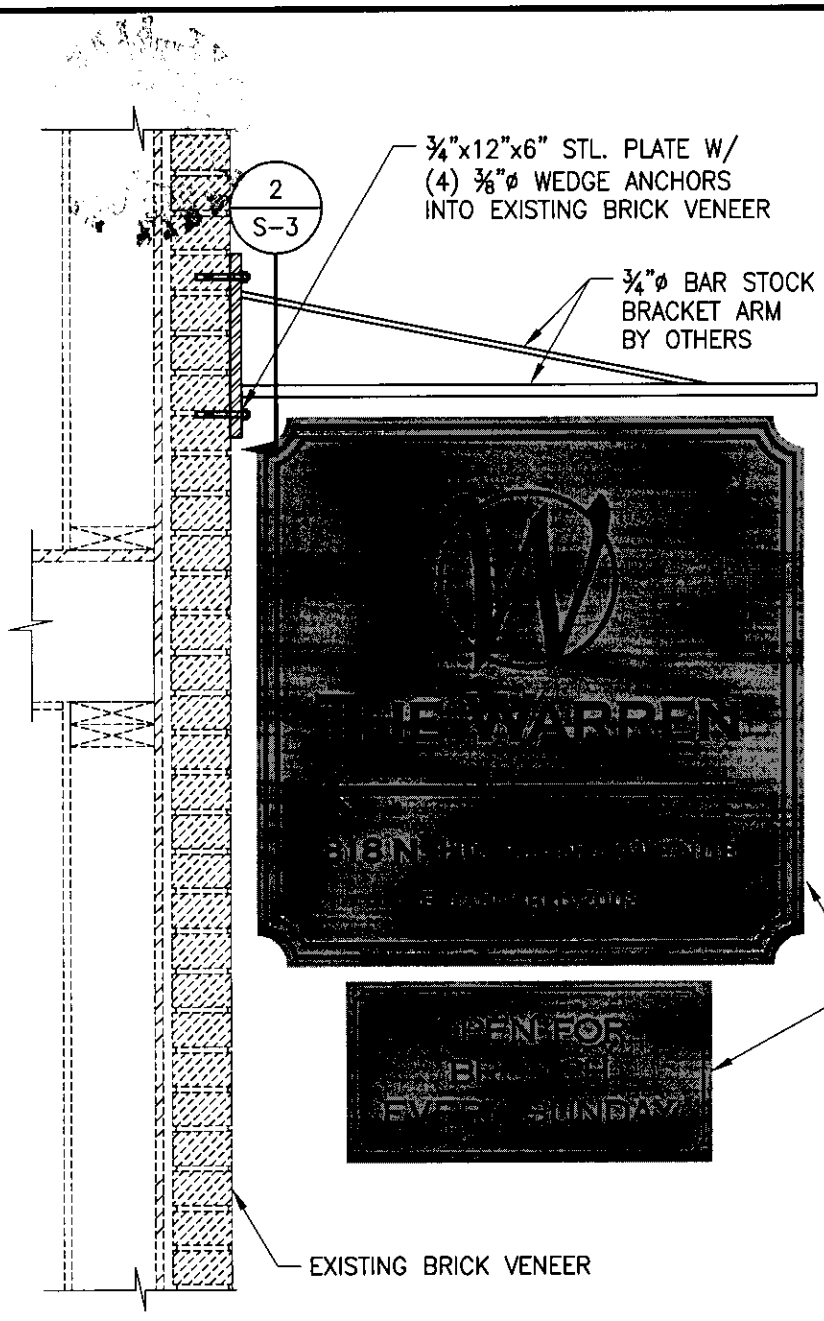

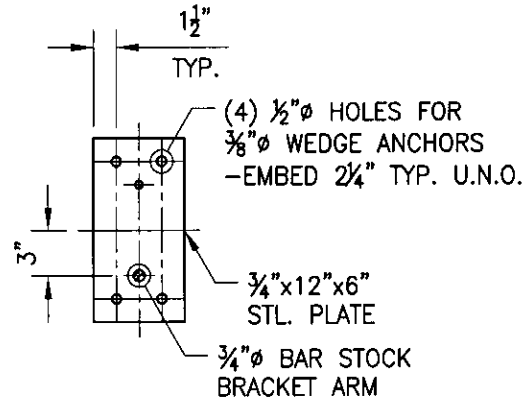

2 / S-3 ANCHOR PLATE
SCALE: 1"=1'-0"

1 / S-3 BRACKET ANCHORAGE DETAIL
SCALE: 1"=1'-0"

GEORGIA REGISTERED No. 29213 PROFESSIONAL ENGINEER PIERRE D. COIRON 2-20-13

SIGNAGE ANCHORAGE DETAILS & CALCULATIONS

Se STABILITY ENGINEERING
431 Ponce de Leon Av, Ste 4, Decatur, GA 30030 Ph/Fax: 404-377-9316

818 N. HIGHLAND THE WARREN

SCALE:	DATE:	DRWN BY:
NOTED	2/20/2013	CAM

STABILITY NUMBER: Se13027

S-3	SHT 3 OF 4	REV

Se STABILITY ENGINEERING
431 W. Ponce de Leon Ave., Suite 4 • Decatur, GA 30030
phone: 404.377.9316 • fax: 404.377.9317
www.stabilityengineering.com

JOB Se13027-818 N. HIGHLAND SIGNAGE
SHEET NO. ANCHORAGE CALCS OF
CALCULATED BY CMURPHY DATE 2/20/2013
CHECKED BY DATE
SCALE

SIGN WEIGHT = 7lbs + 2.1lbs + 1.1lb fasteners = 10lbs

3/4" ø BAR STOCK SCROLL = 7lbs. => P = 1.2(10+7) = 20.41lbs

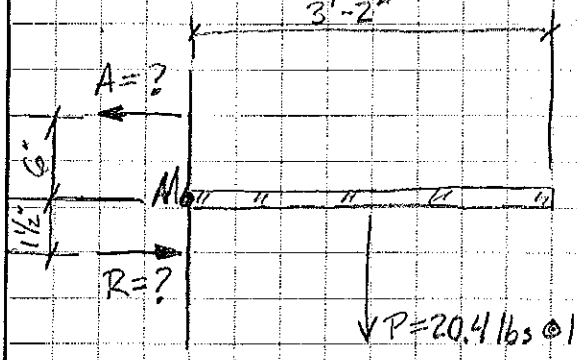

$\Sigma M_M = \emptyset = A \times 6" + R \times 1\frac{1}{2}" - P \times 19"$

LET $A = R$; $A = 19 \times P / 7\frac{1}{2}$

$A = 51.71lbs \times (\Sigma = 1.67) = 86.11lbs$

$\div$ 2 ANCHORS

43#

GEORGIA REGISTERED No. 29213 PROFESSIONAL ENGINEER PIERRE D. COIRON 2-20-13

SIGNAGE ANCHORAGE
DETAILS & CALCULATIONS

Se STABILITY ENGINEERING
431 Ponce de Leon Av, Ste 4, Decatur, GA 30030 Ph/Fax: 404-377-9316

818 N. HIGHLAND
THE WARREN

SCALE:	DATE:	DRWN BY:
NOTED	2/20/2013	CAM

STABILITY NUMBER: Se13027

	SHT	REV
S-4	4 OF 4	

EXHIBIT "B"

TENANT IMPROVEMENT GUIDELINES

A. Prior to the construction of any improvements on the Premises that cost more than $3,000, Tenant must submit to Landlord (Any such requirements may be waived by Landlord with respect to construction after the Commencement Date in its reasonably discretion):

1. A floor plan depicting a layout of the Premises, with each room identified for its intended use.
2. A floor plan depicting the electrical design.
3. A description of changes to primary utility serviced, i.e., water, electric and gas (if any).
4. A description of modifications (if any) to the building's structure.
5. A description of equipment (if any) which may be installed on the roof or which may impact floor loading capacities.
6. Tenant must receive written notice from Landlord that Landlord is in receipt of above Items #1 through #5 prior to Tenant performing any of the work described in above Items #1 through #5 or if fifteen (15) days after sending such notice to Landlord have passed and Landlord has not objected to any of the plans in writing, then Tenant may perform the work described in above Items #1 through #5.

B. During any construction, Tenant shall insure that

1. All work must conform to applicable codes and ordinances, including without limitations ADA standards, and must be performed in a first class, quality workmanlike manner.
2. The job site will be cleaned at the end of each day.
3. All common areas shall be kept dean and clear of construction debris and obstructions.
4. Construction debris shall be hauled off daily and will not be placed in the existing dumpster. If Tenant elects to use a construction dumpster, Tenant must first coordinate the placement thereof with Landlord and protect adjacent paved surfaces.
5. Solid, liquid or semi-liquid wastes such as paint, concrete or drywall Joint compound must not be placed in sanitary drains, storm drains or landscaped areas. Disposal of such substances must be arranged off site.
6. All roof penetrations must be performed by a qualified licensed roofing contractor approved by Landlord. Prior to making any roof penetrations, Tenant must confirm in writing with Landlord whether the roof is under warranty.
7. Any construction activity that might inconvenience neighbors will be done at times when no one will be affected, i.e.. noise, floor penetrations, etc.
8. All construction personnel must conduct themselves in a manner that is not offensive to others.

9. All construction personnel must avoid parking their vehicles in areas near doors, except for short periods of time as necessary for deliveries. Construction parking must be confined to area designated by Landlord.
10. Construction personnel will not enter neighboring leased spaces without Landlord's prior approval.
11. All construction personnel must be advised in advance to cooperate with Landlord's personnel who may visit the site or otherwise contact them without notice.
12. All penetrations of fire-rated separations must be accomplished so that original or Improved fire- rating is maintained.
13. All existing common area finishes must be protected. My changes to common area finishes must be approved by Landlord prior to construction and must be repaired to original condition.
14. No volatile materials are to be stored on site. Access to locked common areas, such as electrical rooms and roof hatches, must be coordinated in advance with Landlord. Any reusable building fixtures must be protected and given to Landlord.

C. After construction Tenant must:

1. Within three working days, notify Landlord that Tenant's construction is substantially complete or the Tenant has taken beneficial occupancy of the premises.
2. Provide the following documents to Landlord before final payment is made to Tenant's contractor:
   a. Original notarized release of liens and final lien waiver.
   b. Copies of operation manuals, cut sheets and warranty information for any equipment permanently mounted to the building structure.
   c. A copy of use and occupancy certificates.

3. In the event any common areas are left in a state of disrepair and Tenant does not make suitable repairs in a timely fashion, Landlord is entitled, at Landlord's sole option, to effectuate the repairs and charge the cost of such repairs to Tenant.

RCS# 3189
12/02/13
4:10 PM

Atlanta City Council

13-O-1394 ENCROACHMENT AGREEMENT; NON-CONFORMING USES W/KKS,INC @ 818 N. HIGHLAND AVE
ADOPT ON SUB

YEAS:	12
NAYS:	0
ABSTENTIONS:	0
NOT VOTING:	3
EXCUSED:	0
ABSENT	1

Y Smith	Y Archibong	NV Moore	Y Bond
B Hall	Y Wan	Y Martin	NV Watson
Y Young	Y Shook	Y Bottoms	Y Willis
Y Winslow	Y Adrean	Y Sheperd	NV Mitchell